Work Order ID 67157

Wednesday, March 09, 2011 12:51:05 PM

Item ID: D206-642-341 **Accept** **Setup Start**

Revision ID: **Stop**

Item Name: Replacement Skidtube

Start Date: 3/9/2011 **Start Qty:** 1.00 **Cust Item ID:**

Required Date: 3/18/2011 **Req'd Qty:** 1.00 **Customer:**

Reference:

Approvals: **Process Plan:** H **Date:** 1-03-9 **Tooling:** **Date:** **Run Start**

QC: **Date:** **SPC (Y/N):** **Date:** **Stop**

Sequence ID/ Work Center ID	Operation Description	Set Up/ Run Hours	Tool ID	Tool #	Plan Code	Accept Qty	Reject Qty	Reject Number	Insp. Stamp
100	DOCUMENT CONTROL	0.00							
DC									
Document Control									

Draw Nbr	Revision Nbr
D2650	F

Memo 0.00

Photocopy bluefile and create labels per PPP D206-642-341 CHG003

N/A

Dart Aerospace Ltd

W/O:		WORK ORDER CHANGES					
DATE	STEP	PROCEDURE CHANGE	By	Date	Qty	Approval Chief Eng / Prod Mgr	Approval QC Inspector

Part No: _____ **PAR #:** _____ **Fault Category:** _____ **NCR:** Yes No **DQA:** _____ **Date:** _____

Resolution: _____ **Disposition:** _____ **QA: N/C Closed:** _____ **Date:** _____

NCR:		WORK ORDER NON-CONFORMANCE (NCR)						
DATE	STEP	Description of NC Section A	Corrective Action Section B			Verification Section C	Approval Chief Eng	Approval QC Inspector
			Initial Chief Eng	Action Description Chief Eng	Sign & Date			

NOTE: Date & initial all entries

Work Order ID 67157

Wednesday, March 09, 2011 12:51:05 PM

Item ID: D206-642-341 **Accept** **Setup Start**

Revision ID: **Stop**

Item Name: Replacement Skidtube

Start Date: 3/9/2011 **Start Qty:** 1.00 **Cust Item ID:**

Required Date: 3/18/2011 **Req'd Qty:** 1.00 **Customer:**

Reference:

Run Start

Approvals: **Process Plan:** _____ **Date:** _____ **Tooling:** _____ **Date:** _____ **Stop**

QC: _____ **Date:** _____ **SPC (Y/N):** _____ **Date:** _____

Sequence ID/ Work Center ID	Operation Description	Set Up/ Run Hours	Tool ID	Tool #	Plan Code	Accept Qty	Reject Qty	Reject Number	Insp. Stamp
110		0.00							
Skidtubes	Skidtubes	0.00							
Skidtubes									

Memo

1-Deburr Fwd edge of tube

2-Remove ridge on inside of Fwd edge of tubeas per Dwg D2650 > DP 11-4-6

3-Weld Fwd Cap as per Dwg D2650. Use aluminum rod. Grind D2647 to fit as required.
A/R□□Aluminum Rod□ M116577 / M113385 > BE 11/04/07

4-Grind weld flush to cap on top surface only.

5-Cut aft end to lenght as per dwg D2650

6-Drill pilot holes using drill Jig DT8168A (A,& B) and DT8025. Open to Ø0.312"

7-Drill holes for wearplates using DT 8028-5. Open to Ø 0.297".

8-Open Aft Cap Hole using #6 Drill Bit

9-Open holes for Tow Ring to Ø0.625" as per Dwg D2650, D2650-5 Drilling Detail

10-Remove inner indexing ridge on aft end of skidtubeas per Dwg D2650

11-Deburr and Blow out all chips form inside the tube

BE 11/04/08

Dart Aerospace Ltd

W/O:		WORK ORDER CHANGES					
DATE	STEP	PROCEDURE CHANGE	By	Date	Qty	Approval Chief Eng / Prod Mgr	Approval QC Inspector

Part No: _____ **PAR #:** _____ **Fault Category:** _____ **NCR:** Yes No **DQA:** _____ **Date:** _____

Resolution: _____ **Disposition:** _____ **QA: N/C Closed:** _____ **Date:** _____

NCR:		WORK ORDER NON-CONFORMANCE (NCR)						
DATE	STEP	Description of NC Section A	Corrective Action Section B			Verification Section C	Approval Chief Eng	Approval QC Inspector
			Initial Chief Eng	Action Description Chief Eng	Sign & Date			

NOTE: Date & initial all entries

H:\fFORMS\Quality Assurance\approved QA\NCRWO RevE

Work Order ID 67157

Wednesday, March 09, 2011 12:51:05 PM

Item ID: D206-642-341 **Accept** **Setup Start**

Revision ID: **Stop**

Item Name: Replacement Skidtube

Start Date: 3/9/2011 **Start Qty:** 1.00 **Cust Item ID:**

Required Date: 3/18/2011 **Req'd Qty:** 1.00 **Customer:**

Reference:

Run Start

Approvals: **Process Plan:** _____ **Date:** _____ **Tooling:** _____ **Date:** _____

Stop

QC: _____ **Date:** _____ **SPC (Y/N):** _____ **Date:** _____

Sequence ID/ Work Center ID	Operation Description	Set Up/ Run Hours	Tool ID	Tool #	Plan Code	Accept Qty	Reject Qty	Reject Number	Insp. Stamp
115	QC5- Inspect part completeness to step on W/O	0.00							
QC	Memo	0.00	8 11/04/08			(10)			
Quality Control									
120	Chemical Conversion Coat per QSI005 4.1	0.00							
HandFinish	Memo	0.00				11-4-8			
Hand Finishing									
125	QC3- Inspect Part Finish	0.00							
QC	Memo	0.00				1	0	11/04/08	
Quality Control									

Dart Aerospace Ltd

W/O:		WORK ORDER CHANGES					
DATE	STEP	PROCEDURE CHANGE	By	Date	Qty	Approval Chief Eng / Prod Mgr	Approval QC Inspector

Part No: _____ **PAR #:** _____ **Fault Category:** _____ **NCR:** Yes No **DQA:** _____ **Date:** _____

Resolution: _____ **Disposition:** _____ **QA: N/C Closed:** _____ **Date:** _____

NCR:		WORK ORDER NON-CONFORMANCE (NCR)						
DATE	STEP	Description of NC Section A	Corrective Action Section B			Verification Section C	Approval Chief Eng	Approval QC Inspector
			Initial Chief Eng	Action Description Chief Eng	Sign & Date			

NOTE: Date & initial all entries

H:\fFORMS\Quality Assurance\approved QA\NCRWO RevE

Work Order ID 67157

Wednesday, March 09, 2011 12:51:05 PM

Item ID: D206-642-341 **Accept** **Setup Start**

Revision ID: **Stop**

Item Name: Replacement Skidtube

Start Date: 3/9/2011 **Start Qty:** 1.00 **Cust Item ID:**

Required Date: 3/18/2011 **Req'd Qty:** 1.00 **Customer:**

Reference:

Run Start

Approvals: **Process Plan:** _____ **Date:** _____ **Tooling:** _____ **Date:** _____ **Stop**

QC: _____ **Date:** _____ **SPC (Y/N):** _____ **Date:** _____

Sequence ID/ Work Center ID	Operation Description	Set Up/ Run Hours	Tool ID	Tool #	Plan Code	Accept Qty	Reject Qty	Reject Number	Insp. Stamp
130		0.00							
Skidtubes	Skidtubes								
Skidtubes	**Memo**	0.00							

1-Open holes to finished size as per Dwg D2650, D2650-5 Drilling Detail (without cutting fluid)

2-Countersink crossbolt spacer holes as per Dwg D2650(without cutting fluid)

3-Deburr. Blow out chips. Grind alodine off around crossbolt spacer.

4-Bond D2654-5 web in place as per QSI 015Ensure holes line upAllow 12 Hrs. cure time before cutting☐
Start Date: 11-4-8 ☐Time:☐ 3pm ☐
Finish Date:_____ ☐Time:☐
A/R☐☐Sikaflex-291☐ M 1116948 ☐
Sikaflex expiry date:☐ 12-1-15

11-4-8

140	QC5- Inspect part completeness to step on W/O	0.00				1	0	BEU04/11	
QC	**Memo**	0.00							
Quality Control									

Dart Aerospace Ltd

W/O:		WORK ORDER CHANGES					
DATE	STEP	PROCEDURE CHANGE	By	Date	Qty	Approval Chief Eng / Prod Mgr	Approval QC Inspector

Part No: _____ **PAR #:** _____ **Fault Category:** _____ **NCR:** Yes No **DQA:** _____ **Date:** _____

Resolution: _____ **Disposition:** _____ **QA: N/C Closed:** _____ **Date:** _____

NCR:		WORK ORDER NON-CONFORMANCE (NCR)						
DATE	STEP	Description of NC Section A	Corrective Action Section B			Verification Section C	Approval Chief Eng	Approval QC Inspector
			Initial Chief Eng	Action Description Chief Eng	Sign & Date			

NOTE: Date & initial all entries.

Work Order ID 67157

Wednesday, March 09, 2011 12:51:05 PM

Item ID: D206-642-341 **Accept** **Setup Start** **Stop**

Revision ID:

Item Name: Replacement Skidtube

Start Date: 3/9/2011 **Start Qty:** 1.00 **Cust Item ID:**

Required Date: 3/18/2011 **Req'd Qty:** 1.00 **Customer:**

Reference:

Run Start **Stop**

Approvals: **Process Plan:** _____ **Date:** _____ **Tooling:** _____ **Date:** _____

QC: _____ **Date:** _____ **SPC (Y/N):** _____ **Date:** _____

Sequence ID/ Work Center ID	Operation Description	Set Up/ Run Hours	Tool ID	Tool #	Plan Code	Accept Qty	Reject Qty	Reject Number	Insp. Stamp
150		0.00							
Skidtubes	Skidtubes								
Skidtubes	**Memo**	0.00							
	1-Prep per QSI 005 and Insert cross bolt spacers D2649. Weld as per QSI 004 and Dwg D2650. Remember to back drill each hole to 0.25" before welding the other side. Use aluminum rod. A/R☐☐Aluminum Rod☐ M111 385 BG 11/04/13								
	2-Grind welds flush as per Dwg D2650. Masking Tape access to inside of the Skidtube								
	3-Counterbore 5/16" x 0.750" deep as per Dwg D2650Deburr								
	4- Install nut plate as per dwg								
170	QC10- Inspect visual per QSI004- ground welds	0.00							
QC	**Memo**	0.00							
Quality Control									

Dart Aerospace Ltd

W/O:		WORK ORDER CHANGES					
DATE	STEP	PROCEDURE CHANGE	By	Date	Qty	Approval Chief Eng / Prod Mgr	Approval QC Inspector

Part No: _____ **PAR #:** _____ **Fault Category:** _____ **NCR:** Yes No **DQA:** _____ **Date:** _____

Resolution: _____ **Disposition:** _____ **QA: N/C Closed:** _____ **Date:** _____

NCR:		WORK ORDER NON-CONFORMANCE (NCR)						
DATE	STEP	Description of NC Section A	Corrective Action Section B			Verification Section C	Approval Chief Eng	Approval QC Inspector
			Initial Chief Eng	Action Description Chief Eng	Sign & Date			

NOTE: Date & initial all entries

H:\fFORMS\Quality Assurance\approved QA\NCRWO RevE

Work Order ID 67157

Wednesday, March 09, 2011 12:51:05 PM

Item ID: D206-642-341 **Accept** **Setup Start** **Stop**

Revision ID:

Item Name: Replacement Skidtube

Start Date: 3/9/2011 **Start Qty:** 1.00 **Cust Item ID:**

Required Date: 3/18/2011 **Req'd Qty:** 1.00 **Customer:**

Reference:

Run Start **Stop**

Approvals: **Process Plan:** _____ **Date:** _____ **Tooling:** _____ **Date:** _____

QC: _____ **Date:** _____ **SPC (Y/N):** _____ **Date:** _____

Sequence ID/ Work Center ID	Operation Description	Set Up/ Run Hours	Tool ID	Tool #	Plan Code	Accept Qty	Reject Qty	Reject Number	Insp. Stamp
180	QC5- Inspect part completeness to step on W/O	0.00							
QC	Memo	0.00							
Quality Control									
190	Pressure Wash per QSI005 4.3	0.00				1	0		11/04/20
HandFinish	Memo	0.00							
Hand Finishing	Brush alodine tube on crossbolt spacer area, do not acid etch, do not dip tube in tank.								
200	White Gloss(Ref:4.3.5.1) per QSI005 4.3-Alum M116964.	0.00				1		BL	11-4-20.
Powdercoat	Memo	0.00							
Powder Coating	START TIME: 9:10 OVEN TEMPERATURE: 320° FINISH TIME: 9:40.								

Dart Aerospace Ltd

W/O:		WORK ORDER CHANGES					
DATE	STEP	PROCEDURE CHANGE	By	Date	Qty	Approval Chief Eng / Prod Mgr	Approval QC Inspector

Part No: _____ **PAR #:** _____ **Fault Category:** _____ **NCR:** Yes No **DQA:** _____ **Date:** _____

Resolution: _____ **Disposition:** _____ **QA: N/C Closed:** _____ **Date:** _____

NCR:		WORK ORDER NON-CONFORMANCE (NCR)						
DATE	STEP	Description of NC Section A	Corrective Action Section B			Verification Section C	Approval Chief Eng	Approval QC Inspector
			Initial Chief Eng	Action Description Chief Eng	Sign & Date			

NOTE: Date & initial all entries

H:\fFORMS\Quality Assurance\approved QA\NCRWO RevE

Work Order ID 67157

Wednesday, March 09, 2011 12:51:05 PM

Item ID: D206-642-341 **Accept** **Setup Start**

Revision ID: **Stop**

Item Name: Replacement Skidtube

Start Date: 3/9/2011 **Start Qty:** 1.00 **Cust Item ID:**

Required Date: 3/18/2011 **Req'd Qty:** 1.00 **Customer:**

Reference:

Run Start

Approvals: **Process Plan:** _____ **Date:** _____ **Tooling:** _____ **Date:** _____

Stop

QC: _____ **Date:** _____ **SPC (Y/N):** _____ **Date:** _____

Sequence ID/ Work Center ID	Operation Description	Set Up/ Run Hours	Tool ID	Tool #	Plan Code	Accept Qty	Reject Qty	Reject Number	Insp. Stamp
210	QC3- Inspect Part Finish	0.00							
QC	Memo	0.00				1	ϕ	11/04/20	
Quality Control									

Dart Aerospace Ltd

W/O:		WORK ORDER CHANGES					
DATE	STEP	PROCEDURE CHANGE	By	Date	Qty	Approval Chief Eng / Prod Mgr	Approval QC Inspector

Part No: _____ **PAR #:** _____ **Fault Category:** _____ **NCR:** Yes No **DQA:** _____ **Date:** _____

Resolution: _____ **Disposition:** _____ **QA: N/C Closed:** _____ **Date:** _____

NCR:		WORK ORDER NON-CONFORMANCE (NCR)						
DATE	STEP	Description of NC Section A	Corrective Action Section B			Verification Section C	Approval Chief Eng	Approval QC Inspector
			Initial Chief Eng	Action Description Chief Eng	Sign & Date			

NOTE: Date & initial all entries

H:\fFORMS\Quality Assurance\approved QA\NCRWO RevE

Work Order ID 67157

Wednesday, March 09, 2011 12:51:05 PM

Item ID: D206-642-341 **Accept** **Setup Start**

Revision ID: **Stop**

Item Name: Replacement Skidtube

Start Date: 3/9/2011 **Start Qty:** 1.00 **Cust Item ID:**

Required Date: 3/18/2011 **Req'd Qty:** 1.00 **Customer:**

Reference:

Run Start

Approvals: **Process Plan:** _____ **Date:** _____ **Tooling:** _____ **Date:** _____

Stop

QC: _____ **Date:** _____ **SPC (Y/N):** _____ **Date:** _____

Sequence ID/ Work Center ID	Operation Description	Set Up/ Run Hours	Tool ID	Tool #	Plan Code	Accept Qty	Reject Qty	Reject Number	Insp. Stamp
220	HandFinishing	0.00				1	ϕ	19	11/01/21
HandFinish	**Memo**	0.00							
Hand Finishing	1-Install inserts & wearpads as per dwg D2922. Use a drop of Sikaflex inside insert holes before installing wearpad/wearplate. A/R□□Sikaflex-291□ M116198□□ Sikaflex expiry date:□ 12/01 2-Install O-Rings D2651-3 on plugs D2651-1 with Petroleum Jelly and install plugs as per Dwg D2650. Clean excess adhesive 3-Install MS27039-4-06 Screw as per DEO 9153 4-Inspect for foreign object per QSI 024 5-Install D2646 Aft Cap and seal with SikaflexClean excess adhesive A/R□□Sikaflex-291□ M116198□□ Sikaflex expiry date:□ 12/01 6-Wing Walk as per Dwg D2650-5 and QSI 005 4.4□ Batch: M117315								

Dart Aerospace Ltd

W/O:		WORK ORDER CHANGES					
DATE	STEP	PROCEDURE CHANGE	By	Date	Qty	Approval Chief Eng / Prod Mgr	Approval QC Inspector

Part No: _____ **PAR #:** _____ **Fault Category:** _____ **NCR:** Yes No **DQA:** _____ **Date:** _____

Resolution: _____ **Disposition:** _____ **QA: N/C Closed:** _____ **Date:** _____

NCR:		WORK ORDER NON-CONFORMANCE (NCR)						
DATE	STEP	Description of NC Section A	Corrective Action Section B			Verification Section C	Approval Chief Eng	Approval QC Inspector
			Initial Chief Eng	Action Description Chief Eng	Sign & Date			

NOTE: Date & initial all entries

H:\fFORMS\Quality Assurance\approved QA\NCRWO RevE

Work Order ID 67157

Wednesday, March 09, 2011 12:51:05 PM

Item ID: D206-642-341 **Accept** **Setup Start**

Revision ID: **Stop**

Item Name: Replacement Skidtube

Start Date: 3/9/2011 **Start Qty:** 1.00 **Cust Item ID:**

Required Date: 3/18/2011 **Req'd Qty:** 1.00 **Customer:**

Reference:

Run Start

Approvals: **Process Plan:** _____ **Date:** _____ **Tooling:** _____ **Date:** _____

Stop

QC: _____ **Date:** _____ **SPC (Y/N):** _____ **Date:** _____

Sequence ID/ Work Center ID	Operation Description	Set Up/ Run Hours	Tool ID	Tool #	Plan Code	Accept Qty	Reject Qty	Reject Number	Insp. Stamp
230	QC3- Inspect Part Finish	0.00							
QC	Memo	0.00					11	04	26 (1)
Quality Control									
240	QC5- Inspect part completeness to step on W/O	0.00							
QC	Memo	0.00					11	04	26 (1)
Quality Control									
250	Packaging	0.00							
Packaging	Memo	0.00							
Packaging	Identify and pack for shipping as per PPP D206-642-341 Location: PPP Rev: PPP 67148								

Dart Aerospace Ltd

W/O:		WORK ORDER CHANGES					
DATE	STEP	PROCEDURE CHANGE	By	Date	Qty	Approval Chief Eng / Prod Mgr	Approval QC Inspector

Part No: _____ **PAR #:** _____ **Fault Category:** _____ **NCR:** Yes No **DQA:** _____ **Date:** _____

Resolution: _____ **Disposition:** _____ **QA: N/C Closed:** _____ **Date:** _____

NCR:		WORK ORDER NON-CONFORMANCE (NCR)						
DATE	STEP	Description of NC Section A	Corrective Action Section B			Verification Section C	Approval Chief Eng	Approval QC Inspector
			Initial Chief Eng	Action Description Chief Eng	Sign & Date			

NOTE: Date & initial all entries

H:\fFORMS\Quality Assurance\approved QA\NCRWO RevE

Work Order ID 67157

Wednesday, March 09, 2011 12:51:05 PM

Item ID: D206-642-341 **Accept** **Setup Start**

Revision ID: **Stop**

Item Name: Replacement Skidtube

Start Date: 3/9/2011 **Start Qty:** 1.00 **Cust Item ID:**

Required Date: 3/18/2011 **Req'd Qty:** 1.00 **Customer:**

Reference:

Run Start

Approvals: **Process Plan:** _____ **Date:** _____ **Tooling:** _____ **Date:** _____

Stop

QC: _____ **Date:** _____ **SPC (Y/N):** _____ **Date:** _____

Sequence ID/ Work Center ID	Operation Description	Set Up/ Run Hours	Tool ID	Tool #	Plan Code	Accept Qty	Reject Qty	Reject Number	Insp. Stamp
260	QC21- Final Inspection - Work Order Release	0.00							
QC Quality Control	**Memo**	0.00							

11/6/8

PR 11-06-7

(1)

Dart Aerospace Ltd

W/O:		WORK ORDER CHANGES					
DATE	STEP	PROCEDURE CHANGE	By	Date	Qty	Approval Chief Eng / Prod Mgr	Approval QC Inspector

Part No: _____ **PAR #:** _____ **Fault Category:** _____ **NCR:** Yes No **DQA:** _____ **Date:** _____

Resolution: _____ **Disposition:** _____ **QA: N/C Closed:** _____ **Date:** _____

NCR:		WORK ORDER NON-CONFORMANCE (NCR)						
DATE	STEP	Description of NC Section A	Corrective Action Section B			Verification Section C	Approval Chief Eng	Approval QC Inspector
			Initial Chief Eng	Action Description Chief Eng	Sign & Date			

NOTE: Date & initial all entries

H:\fFORMS\Quality Assurance\approved QA\NCRWO RevE

Picklist Print

Wednesday, March 09, 2011 12:51:12 PM

8

Work Order ID: 67157

Parent Item: D206-642-341

Parent Item Name: Replacement Skidtube

Start Date: 3/9/2011 **Required Date:** 3/18/2011

Start Qty: 1.00 **Required Qty:** 1.00

Comments: IPP Rev: H□05.10.11□Added D3429-1 per CHG004□KJ/CP/JLM
IPP Rev:I 08-09-29 revF as per dwg DD verified by:EC Est Rev:J 09-03-02 as per DSI9440 rev.a DD verified by:EC IPP rev K 10.08.03 chg ms27039-1-08 for "C" type EC verified by DD

Component Item ID/ Item Name	Replacement Item ID	Mfg/ Purch	Bin Item	Primary Location	Last Location	Route Seq ID	Unit of Measure	Qty on Hand	Qty per Kit	Total Qty	Qty Issued	Date Issued	Status
AN960JD416	NAS1149D0463J	Purchased	No				Each	30.0000		1			
Washer											11/04/20		
				Location			**Loc Qty**		**Loc Code**				
				ST300			24		M116805				
					113288		24						
				ST356			6						
					115622		6						
CCR264SS3-3		Purchased	No				Each	332.0000		2			
Cherry Rivet											BG 11/04/14		
				Location			**Loc Qty**		**Loc Code**				
				ST311			332						
					112314		4						
					113539		44						
					113973		88						
					117086		196			2			

Dart Aerospace Ltd

W/O:		WORK ORDER CHANGES					
DATE	STEP	PROCEDURE CHANGE	By	Date	Qty	Approval Chief Eng / Prod Mgr	Approval QC Inspector

Part No: _____ **PAR #:** _____ **Fault Category:** _____ **NCR:** Yes No **DQA:** _____ **Date:** _____

Resolution: _____ **Disposition:** _____ **QA: N/C Closed:** _____ **Date:** _____

NCR:		WORK ORDER NON-CONFORMANCE (NCR)						
DATE	STEP	Description of NC Section A	Corrective Action Section B			Verification Section C	Approval Chief Eng	Approval QC Inspector
			Initial Chief Eng	Action Description Chief Eng	Sign & Date			

NOTE: Date & initial all entries

Picklist Print

Wednesday, March 09, 2011 12:51:12 PM

Work Order ID: 67157

Parent Item: D206-642-341

Parent Item Name: Replacement Skidtube

Start Date: 3/9/2011 **Required Date:** 3/18/2011

Start Qty: 1.00 **Required Qty:** 1.00

CR3212-4-03 Purchased No Each 1,837.000 2

Cherry Rivet

BE 10/04/14

Location	Loc Qty	Loc Code
MEZZ	1837	
110139	2	
110153	35	
111359	5	
112314	2	
114436	448	
114450	31	
114859	1314	

2

D2620 Manufactured No Each 15.0000 1

Skidtube, 206 Skidtube

Location	Loc Qty	Loc Code
LG	15	
62684	6	
64784	9	

1

D2647 Manufactured No Each 51.0000 1

Cap

11-4-6

BE 11/04/07

Location	Loc Qty	Loc Code
FP	51	
55352	51	

1

Dart Aerospace Ltd

W/O:		WORK ORDER CHANGES					
DATE	STEP	PROCEDURE CHANGE	By	Date	Qty	Approval Chief Eng / Prod Mgr	Approval QC Inspector

Part No: _____ **PAR #:** _____ **Fault Category:** _____ **NCR:** Yes No **DQA:** _____ **Date:** _____

Resolution: _____ **Disposition:** _____ **QA: N/C Closed:** _____ **Date:** _____

NCR:		WORK ORDER NON-CONFORMANCE (NCR)						
DATE	STEP	Description of NC Section A	Corrective Action Section B			Verification Section C	Approval Chief Eng	Approval QC Inspector
			Initial Chief Eng	Action Description Chief Eng	Sign & Date			

NOTE: Date & initial all entries

H:\FORMS\Quality Assurance\approved QA\NCRWO RevE

Picklist Print

Wednesday, March 09, 2011 12:51:12 PM

Work Order ID: 67157

Parent Item: D206-642-341

Parent Item Name: Replacement Skidtube

Start Date: 3/9/2011 **Required Date:** 3/18/2011

Start Qty: 1.00 **Required Qty:** 1.00

D2649 Manufactured No Each 120.0000 19

Cross Bolt Spacer

BE 11/04/13
B-68224 x19

Location		Loc Qty	Loc Code
LG		120	
	58545	2	
	60652	4	
	61496	2	
	62889	11	
	63359	3	
	65317	98	

D2654-5 Manufactured No Each 2.0000 1

Web

Location		Loc Qty	Loc Code
LG	B67675	2	
	64878	2	

(1) DP 11-4-8

D2680-041 Manufactured No Each 14.0000 1

Nut Plate

BE 11/04/14

Location		Loc Qty	Loc Code
ST020		14	
	55366	14	

Dart Aerospace Ltd

W/O:		WORK ORDER CHANGES					
DATE	STEP	PROCEDURE CHANGE	By	Date	Qty	Approval Chief Eng / Prod Mgr	Approval QC Inspector

Part No: _____ **PAR #:** _____ **Fault Category:** _____ **NCR:** Yes No **DQA:** _____ **Date:** _____

Resolution: _____ **Disposition:** _____ **QA: N/C Closed:** _____ **Date:** _____

NCR:		WORK ORDER NON-CONFORMANCE (NCR)						
DATE	STEP	Description of NC Section A	Corrective Action Section B			Verification Section C	Approval Chief Eng	Approval QC Inspector
			Initial Chief Eng	Action Description Chief Eng	Sign & Date			

NOTE: Date & initial all entries

H:\fFORMS\Quality Assurance\approved QA\NCRWO RevE

Picklist Print

Wednesday, March 09, 2011 12:51:12 PM

Work Order ID: 67157

Parent Item: D206-642-341

Parent Item Name: Replacement Skidtube

Start Date: 3/9/2011 **Required Date:** 3/18/2011

Start Qty: 1.00 **Required Qty:** 1.00

MS27039C1-08 Purchased No Each 959.0000 56

SCREW

Location		Loc Qty	Loc Code
FP		63	
	115336	63	
ST293		896	
	115589	347	x56
	116022	148	
	116373	400	
	19185	1	

ALS4-1032-130 Purchased No 220 Each 759.0000 54 54

Insert

Location		Loc Qty	Loc Code
PKG11		624	
	114723	42	
	116864	582	
ST282		96	
	110511	10	
	115911	86	M1116800 x54
ST381		39	
	114654	39	

AN960C10L ~~NAS1149C0332~~ R Purchased No 220 Each 61.0000 54 54

washer

Location		Loc Qty	Loc Code
ST297		61	M1117291 x54
	107534	59	
	108246	2	

Dart Aerospace Ltd

W/O:		WORK ORDER CHANGES					
DATE	STEP	PROCEDURE CHANGE	By	Date	Qty	Approval Chief Eng / Prod Mgr	Approval QC Inspector

Part No: _____ **PAR #:** _____ **Fault Category:** _____ **NCR:** Yes No **DQA:** _____ **Date:** _____

Resolution: _____ **Disposition:** _____ **QA: N/C Closed:** _____ **Date:** _____

NCR:		WORK ORDER NON-CONFORMANCE (NCR)						
DATE	STEP	Description of NC Section A	Corrective Action Section B			Verification Section C	Approval Chief Eng	Approval QC Inspector
			Initial Chief Eng	Action Description Chief Eng	Sign & Date			

NOTE: Date & initial all entries

H:\fFORMS\Quality Assurance\approved QA\NCRWO RevE

Picklist Print

Wednesday, March 09, 2011 12:51:13 PM

Work Order ID: 67157

Parent Item: D206-642-341

Parent Item Name: Replacement Skidtube

Start Date: 3/9/2011 **Required Date:** 3/18/2011

Start Qty: 1.00 **Required Qty:** 1.00

AN960JD10L	NAS1149D0332J	Purchased	No	220	Each	4.0000	2	2	
Washer									

Location	Loc Qty	Loc Code	
ST335	4	M 117291	X2
11912	4		

D2646		Manufactured	No	220	Each	71.0000	1	1	
Aft Cap									

Location	Loc Qty	Loc Code	
FP-4	1		
57332	1		
FP6	16		
52663	3		
62678	12		X1
63633	1		
Return 2010	54		
62678	54		

D2651-1		Manufactured	No	220	Each	511.0000	14	14	
Plug									

Location	Loc Qty	Loc Code	
FP	189		
51530	152		
62638	37		
fpa	322		
53349	205		
57869	117		X14

Dart Aerospace Ltd

W/O:		WORK ORDER CHANGES					
DATE	STEP	PROCEDURE CHANGE	By	Date	Qty	Approval Chief Eng / Prod Mgr	Approval QC Inspector

Part No: _____ **PAR #:** _____ **Fault Category:** _____ **NCR:** Yes No **DQA:** _____ **Date:** _____

Resolution: _____ **Disposition:** _____ **QA: N/C Closed:** _____ **Date:** _____

NCR:		WORK ORDER NON-CONFORMANCE (NCR)						
DATE	STEP	Description of NC Section A	Corrective Action Section B			Verification Section C	Approval Chief Eng	Approval QC Inspector
			Initial Chief Eng	Action Description Chief Eng	Sign & Date			

NOTE: Date & initial all entries

H:\fFORMS\Quality Assurance\approved QA\NCRWO RevE

Picklist Print

Wednesday, March 09, 2011 12:51:13 PM

Work Order ID: 67157

Parent Item: D206-642-341

Parent Item Name: Replacement Skidtube

Start Date: 3/9/2011 **Required Date:** 3/18/2011

Start Qty: 1.00 **Required Qty:** 1.00

D2651-3	Manufactured	No	220	Each	404.0000	14	14	
O-Ring								11/04/20

Location	Loc Qty	Loc Code	
FP	404		
46114	12		
61962	392		✓14

D3535-11	Manufactured	No	220	Each	7.0000	1	1	
Wearshoe								11/04/20

Location	Loc Qty	Loc Code	
FP019	7	B46714	✓1
57261	1		
63676	6		

D3535-23	Manufactured	No	220	Each	18.0000	1	1	
Wearshoe								11/04/20

Location	Loc Qty	Loc Code	
FP021	18		
63571	4		✓1
66236	13		

D3535-35	Manufactured	No	220	Each	12.0000	1	1	
Wearshoe								11/04/20

Location	Loc Qty	Loc Code	
FP018	12		
65926	12		✓1

Dart Aerospace Ltd

W/O:		WORK ORDER CHANGES					
DATE	STEP	PROCEDURE CHANGE	By	Date	Qty	Approval Chief Eng / Prod Mgr	Approval QC Inspector

Part No: _____ **PAR #:** _____ **Fault Category:** _____ **NCR:** Yes No **DQA:** _____ **Date:** _____

Resolution: _____ **Disposition:** _____ **QA: N/C Closed:** _____ **Date:** _____

NCR:		WORK ORDER NON-CONFORMANCE (NCR)						
DATE	STEP	Description of NC Section A	Corrective Action Section B			Verification Section C	Approval Chief Eng	Approval QC Inspector
			Initial Chief Eng	Action Description Chief Eng	Sign & Date			

NOTE: Date & initial all entries

H:\fFORMS\Quality Assurance\approved QA\NCRWO RevE

Picklist Print

Wednesday, March 09, 2011 12:51:13 PM

Work Order ID: 67157

Parent Item: D206-642-341

Parent Item Name: Replacement Skidtube

Start Date: 3/9/2011 **Required Date:** 3/18/2011

Start Qty: 1.00 **Required Qty:** 1.00

D3536-11	Manufactured	No	220	Each	19.0000	1	1	
Gasket								Jl 11/04/20

Location	Loc Qty	Loc Code	
FP011	15		
57867	3		X1
65574	12		
ST497A	4		
46715	4		

D3536-23	Manufactured	No	220	Each	36.0000	1	1	
Gasket								Jl 11/04/20

Location	Loc Qty	Loc Code	
FP011	26	B63238	X1
63570	1		
66560	25		
ST	10		
66240	10		

D3536-35	Manufactured	No	220	Each	16.0000	1	1	
Gasket								Jl 11/04/20

Location	Loc Qty	Loc Code	
FP012	16		
58683	1		
63579	1		
65573	2		
66237	12		X1

Dart Aerospace Ltd

W/O:		WORK ORDER CHANGES					
DATE	STEP	PROCEDURE CHANGE	By	Date	Qty	Approval Chief Eng / Prod Mgr	Approval QC Inspector

Part No: _____ **PAR #:** _____ **Fault Category:** _____ **NCR:** Yes No **DQA:** _____ **Date:** _____

Resolution: _____ **Disposition:** _____ **QA: N/C Closed:** _____ **Date:** _____

NCR:		WORK ORDER NON-CONFORMANCE (NCR)						
DATE	STEP	Description of NC Section A	Corrective Action Section B			Verification Section C	Approval Chief Eng	Approval QC Inspector
			Initial Chief Eng	Action Description Chief Eng	Sign & Date			

NOTE: Date & initial all entries

H:\fFORMS\Quality Assurance\approved QA\NCRWO RevE

Picklist Print

Wednesday, March 09, 2011 12:51:13 PM

Work Order ID: 67157

Parent Item: D206-642-341

Parent Item Name: Replacement Skidtube

Start Date: 3/9/2011 **Required Date:** 3/18/2011

Start Qty: 1.00 **Required Qty:** 1.00

D3537-1	Manufactured	No	220	Each	29.0000	6	6	
Wearpad								JH 11/04/20

Location	Loc Qty	Loc Code	
FP017	29	B65927	x2
37749	6		~~x4~~
65057	23	B66935	

D3537-3	Manufactured	No	220	Each	26.0000	1	1	
Wearpad								JH 11/04/20

Location	Loc Qty	Loc Code	
FP17	26		
65929	26		x1

MS27039-4-06	Purchased	No	220	Each	91.0000	1	1	
Screw								JH 11/04/20

Location	Loc Qty	Loc Code	
ST292	91		
109061	4		
115460	87		~~x1~~

Dart Aerospace Ltd

W/O:		WORK ORDER CHANGES					
DATE	STEP	PROCEDURE CHANGE	By	Date	Qty	Approval Chief Eng / Prod Mgr	Approval QC Inspector

Part No: _____ **PAR #:** _____ **Fault Category:** _____ **NCR:** Yes No **DQA:** _____ **Date:** _____

Resolution: _____ **Disposition:** _____ **QA: N/C Closed:** _____ **Date:** _____

NCR:		WORK ORDER NON-CONFORMANCE (NCR)						
DATE	STEP	Description of NC Section A	Corrective Action Section B			Verification Section C	Approval Chief Eng	Approval QC Inspector
			Initial Chief Eng	Action Description Chief Eng	Sign & Date			

NOTE: Date & initial all entries

H:\fFORMS\Quality Assurance\approved QA\NCRWO RevE

QTY -1	QTY -3	QTY -5	QTY -7	PART NUMBER	DESCRIPTION
X				**D2650-1**	**SKIDTUBE ASSEMBLY**
	X			**D2650-3**	**SKIDTUBE ASSEMBLY**
		X		**D2650-5**	**SKIDTUBE ASSEMBLY**
			X	**D2650-7**	**SKIDTUBE ASSEMBLY**
1	1	1	1	D2600-1-160	EXTRUSION
1				D2654-1	WEB
	1			D2654-3	WEB
		1		D2654-5	WEB
			1	D2654-7	WEB
1	1	1	1	D2646	AFT CAP
1	1	1	1	D2647	CAP
17	18	19	23	D2649	CROSS BOLT SPACER
16	18	14	22	D2651-1	PLUG
16	18	14	22	D2651-3	O-RING
1	1	1	1	D2680-041	NUT PLATE
2	2			D3286-1	DOUBLER
2	2			D3286-3	STUD
42	44	54	60	ALS7-1032-130	INSERT (or AKS4-1032-130, ALS4-1032-130, ALS7-1032-130)
2	2	2	2	AN960JD10L	WASHER
2	2	2	2	CCR264SS3-3	RIVET
2	2	2	2	CR3212-4-03	RIVET
2	2	2	2	MS27039-1-08	SCREW
1	1	1	1	MS27039-4-06	SCREW
1	1	1	1	AN960JD416	WASHER
52	52			CR3212-4-04	RIVET

F

F

SHOP COPY
RETURN TO
ENGINEERING
UNCONTROLLED COPY
SUBJECT TO AMENDMENT
WITHOUT NOTICE
WORK ORDER
NO. 67157
11-03-9

RELEASED
08.07.23

NOTES:

1) MATERIAL: N/A
2) FINISH: -CHEMICAL CONVERSION COAT PER DART QSI 005 4.1
   -POWDER COAT WHITE (4.3.5.1) PER DART QSI 005 4.3
   -BLACK ANTI-SKID PAINT AS INDICATED TO 0.5 ABOVE LOCATION RIDGE PER DART QSI 005 4.4
3) TOLERANCES: PER DART QSI 018 UNLESS OTHERWISE NOTED
4) UNITS: INCHES UNLESS OTHERWISE NOTED
5) BREAK SHARP EDGES: 0.005 TO 0.010 MAX
6) IDENTIFICATION: NONE
7) WEIGHT: N/A
8) WELD PER DART QSI 004
9) DAMAGE TOLERANCE ON FWD BEND:
   THERE SHOULD BE NO VISIBLE WRINKLES IN THE BEND FROM THE GROUND TO A HEIGHT OF 5 INCHES ABOVE THE GROUND. IT IS ACCEPTABLE TO POLISH OUT GOUGES UP TO 0.020 DEEP IN THE BENT PORTION OF THE TUBE. A MAXIMUM REDUCTION IN DIAMETER OF 0.150" IS ACCEPTABLE IN THE BENT PORTION OF THE TUBE.
10) BOND WEB INTO OUTER TUBE WITH SIKAFLEX-241/-291 ADHESIVE PER DART QSI 015
11) INSERT D2651-1 PLUG C/W D2651-3 O-RING IN HOLES MARKED 'P' (BOTH SIDES OF TUBE)
12) DRILL ∅0.297 FOR ALS7-1032-130 INSERTS USING TEMPLATE DT8056-1 ON -1 TUBE, DT8056-3 ON -3 TUBE, DT8056-5 ON -5 TUBE, AND DT8056-7 ON -7 TUBE. INSTALL INSERTS AFTER FINISH.
13) TOLERANCES ARE PER DART QSI 018 UNLESS OTHERWISE NOTED

REV.	DESCRIPTION	BY	DATE
F	DRAWING UPDATED TO CURRENT STANDARDS. SHT 6 ADDED. ALL SECTION AND DETAIL VIEWS TRANSFERED TO SHT 6. SHT 1 IN PL PART D2649 QTY UPDATED. SHT 6 SECT C-C GRIND INSTRUCTIONS DELETED FROM NOTE 7 (SEE NCR 239).	AJS	08.08.08
E	RMOVE CBORE, CHG DRILL, ADD CHAMFER	CP	06.03.30
D	REDRAW; INCORP. DEO9136/9153/9163 MOD GROUND HANDLING ON D2650-1/-3	CP	04.05.17
C	CHANGE HOLE PATTERN AND FRONT END	DS	97.10.29
B	AS MANUFACTURED CHANGES	DS	97.06.26
A	NEW ISSUE	DS	97.03.25

DESIGN	DS	**DART AEROSPACE USA, INC** PORT HADLOCK, WA
DRAWN	AJS	
CHECKED		DRAWING NO. D2650 — REV. F — SHEET 1 OF 6
MFG. APPR.		
APPROVED		TITLE: 206/407 SKIDTUBE ASSEMBLIES — SCALE: NTS
DE APPR.		
DATE	08.08.08	

COPYRIGHT © 1997 BY DART AEROSPACE USA, INC
THIS DOCUMENT IS PRIVATE AND CONFIDENTIAL AND IS SUPPLIED ON THE EXPRESS CONDITION THAT IT IS NOT TO BE USED FOR ANY PURPOSE OR COPIED OR COMMUNICATED TO ANY OTHER PERSON WITHOUT WRITTEN PERMISSION FROM DART AEROSPACE USA, INC

Dart Aerospace Ltd

W/O:		WORK ORDER CHANGES					
DATE	STEP	PROCEDURE CHANGE	By	Date	Qty	Approval Chief Eng / Prod Mgr	Approval QC Inspector

Part No: _____ **PAR #:** _____ **Fault Category:** _____ **NCR:** Yes No **DQA:** _____ **Date:** _____

Resolution: _____ **Disposition:** _____ **QA: N/C Closed:** _____ **Date:** _____

NCR:		WORK ORDER NON-CONFORMANCE (NCR)						
DATE	STEP	Description of NC Section A	Corrective Action Section B			Verification Section C	Approval Chief Eng	Approval QC Inspector
			Initial Chief Eng	Action Description Chief Eng	Sign & Date			

NOTE: Date & initial all entries

H:\fFORMS\Quality Assurance\approved QA\NCRWO RevE

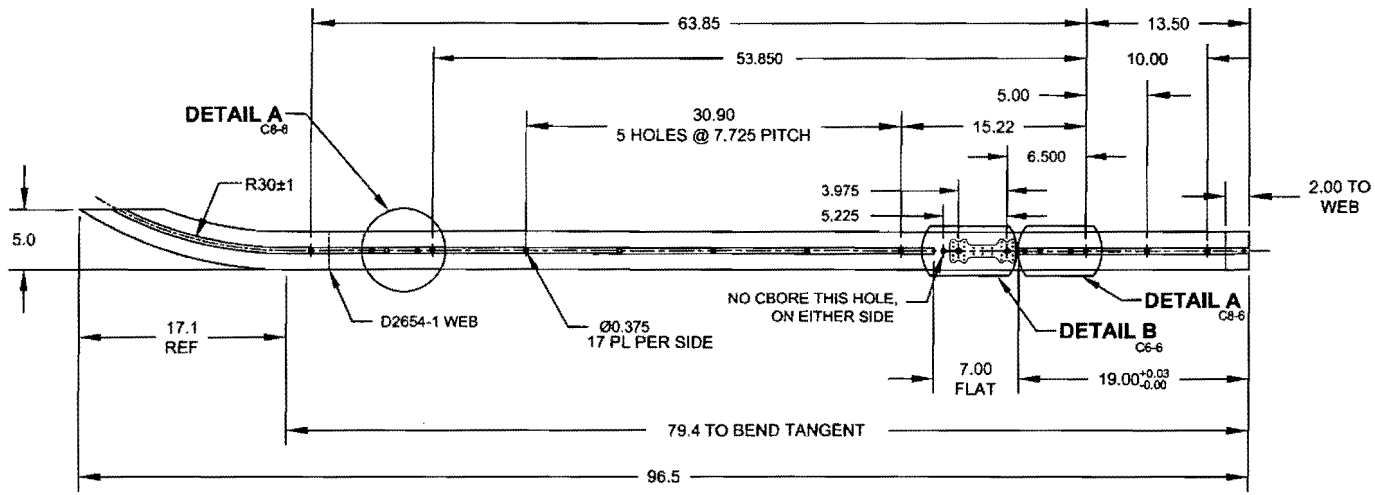

D2650-1 BENDING/DRILLING DETAIL

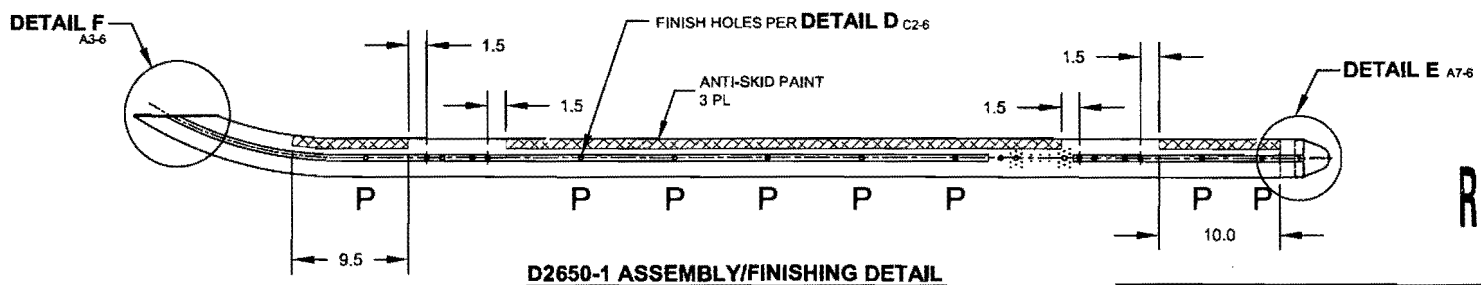

D2650-1 ASSEMBLY/FINISHING DETAIL

RELEASED 08.09.22

DESIGN	DS	DART AEROSPACE USA, INC PORT HADLOCK, WA
DRAWN	AJS	
CHECKED		DRAWING NO. REV. F
MFG. APPR.		D2650 SHEET 2 OF 6
APPROVED		TITLE SCALE
DE APPR.		206/407 SKIDTUBE ASSEMBLIES NTS
DATE	08.08.08	

COPYRIGHT © 1997 BY DART AEROSPACE USA, INC
THIS DOCUMENT IS PRIVATE AND CONFIDENTIAL AND IS SUPPLIED ON THE EXPRESS CONDITION THAT IT IS NOT TO BE USED FOR ANY PURPOSE OR COPIED OR COMMUNICATED TO ANY OTHER PERSON WITHOUT WRITTEN PERMISSION FROM DART AEROSPACE USA, INC

Dart Aerospace Ltd

W/O:		WORK ORDER CHANGES					
DATE	STEP	PROCEDURE CHANGE	By	Date	Qty	Approval Chief Eng / Prod Mgr	Approval QC Inspector

Part No: _____ **PAR #:** _____ **Fault Category:** _____ **NCR:** Yes No **DQA:** _____ **Date:** _____

Resolution: _____ **Disposition:** _____ **QA: N/C Closed:** _____ **Date:** _____

NCR:		WORK ORDER NON-CONFORMANCE (NCR)						
DATE	STEP	Description of NC Section A	Corrective Action Section B			Verification Section C	Approval Chief Eng	Approval QC Inspector
			Initial Chief Eng	Action Description Chief Eng	Sign & Date			

NOTE: Date & initial all entries

H:\fFORMS\Quality Assurance\approved QA\NCRWO RevE

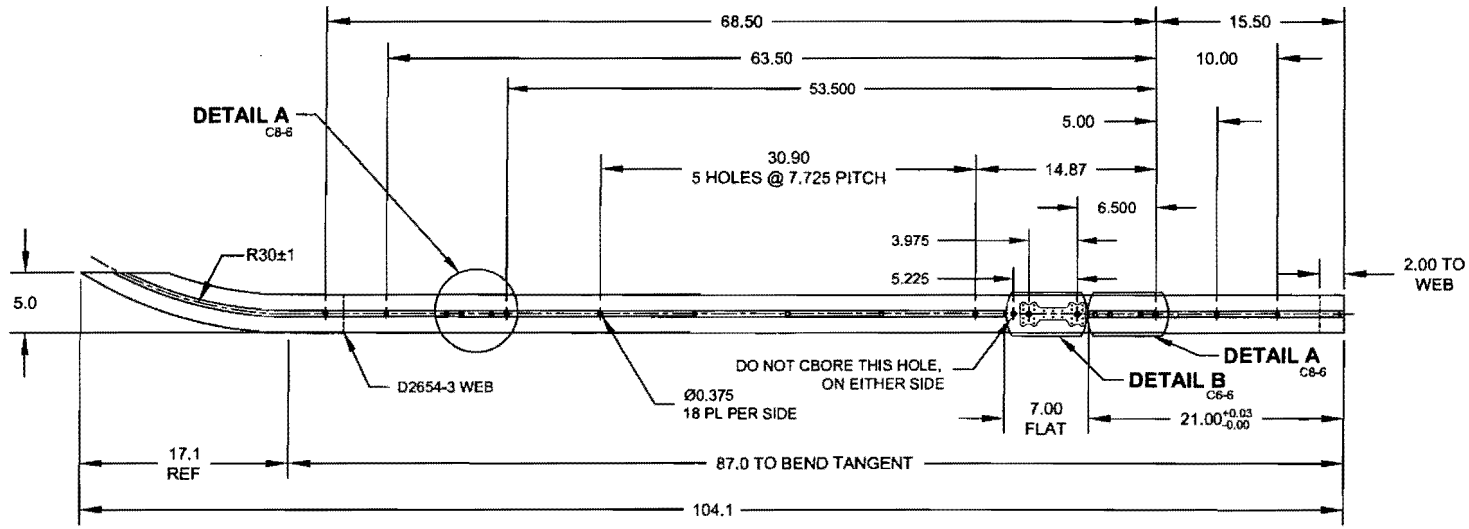

D2650-3 BENDING/DRILLING DETAIL

u/o 67157

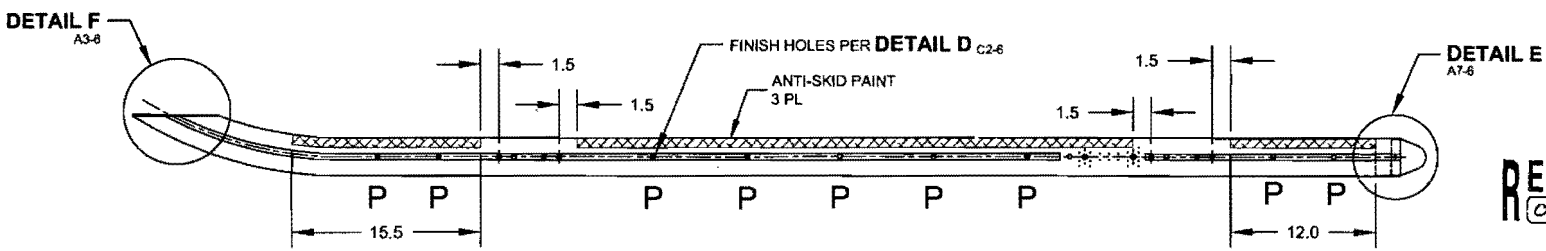

D2650-3 ASSEMBLY/FINISHING DETAIL

RELEASED 08 07 22

DESIGN	DS	**DART AEROSPACE USA, INC** PORT HADLOCK, WA
DRAWN	AJS	
CHECKED		DRAWING NO. REV. F
MFG. APPR.		D2650 SHEET 3 OF 6
APPROVED		TITLE SCALE
DE APPR.		206/407 SKIDTUBE ASSEMBLIES NTS
DATE	08.08.08	

COPYRIGHT © 1967 BY DART AEROSPACE USA, INC
THIS DOCUMENT IS PRIVATE AND CONFIDENTIAL AND IS SUPPLIED ON THE EXPRESS CONDITION THAT IT IS NOT TO BE USED FOR ANY PURPOSE OR COPIED OR CONSIGNED TO TO ANY OTHER PERSON WITHOUT WRITTEN PERMISSION FROM DART AEROSPACE USA INC.

Dart Aerospace Ltd

W/O:		WORK ORDER CHANGES					
DATE	STEP	PROCEDURE CHANGE	By	Date	Qty	Approval Chief Eng / Prod Mgr	Approval QC Inspector

Part No: _____ **PAR #:** _____ **Fault Category:** _____ **NCR:** Yes No **DQA:** _____ **Date:** _____

Resolution: _____ **Disposition:** _____ **QA: N/C Closed:** _____ **Date:** _____

NCR:		WORK ORDER NON-CONFORMANCE (NCR)						
DATE	STEP	Description of NC Section A	Corrective Action Section B			Verification Section C	Approval Chief Eng	Approval QC Inspector
			Initial Chief Eng	Action Description Chief Eng	Sign & Date			

NOTE: Date & initial all entries

H:\fFORMS\Quality Assurance\approved QA\NCRWO RevE

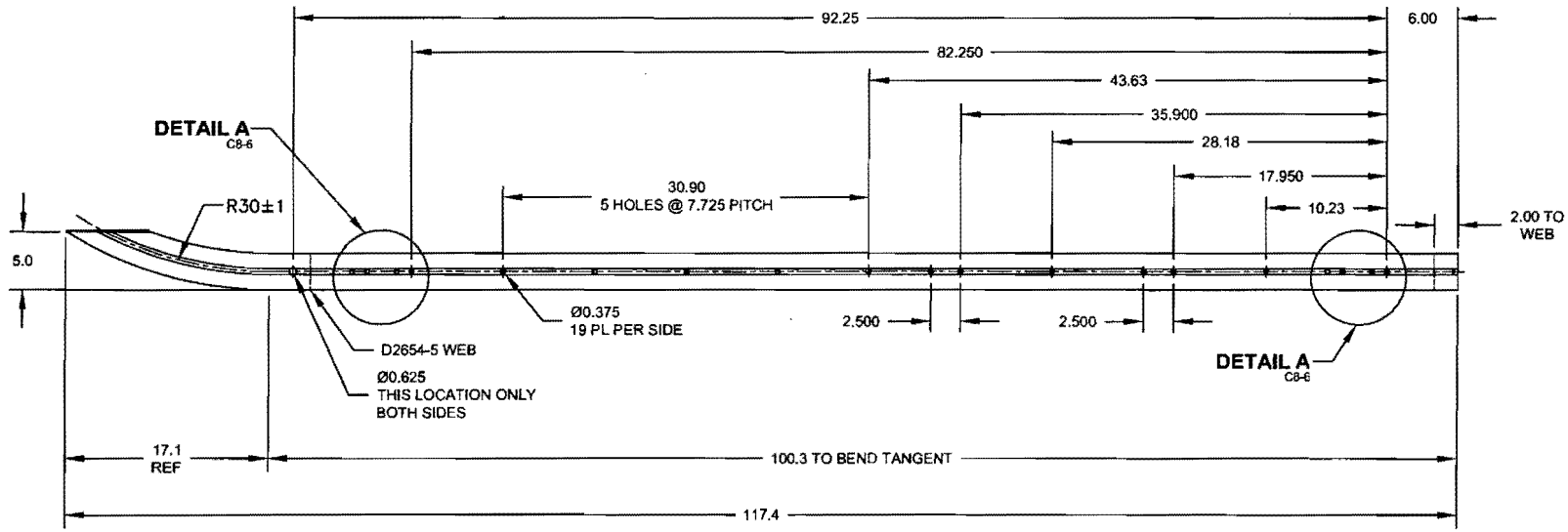

D2650-5 BENDING/DRILLING DETAIL

w/o 67157

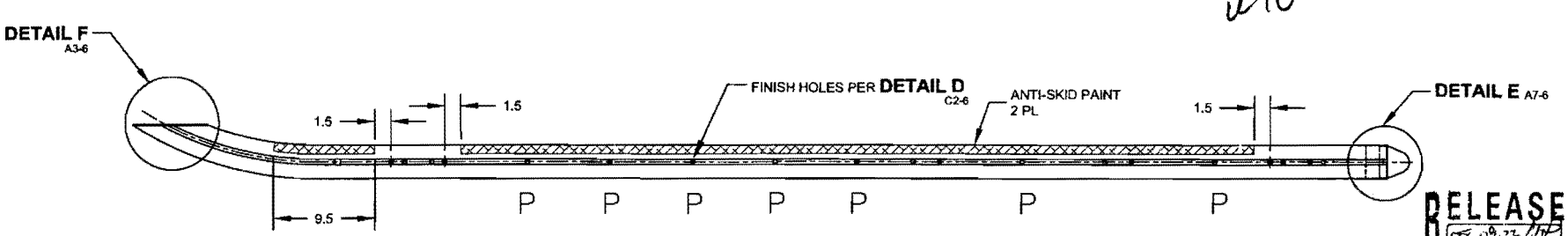

RELEASED 08.09.22

D2650-5 ASSEMBLY/FINISHING DETAIL

DESIGN	DS	DART AEROSPACE USA, INC PORT HADLOCK, WA
DRAWN	AJS	
CHECKED		DRAWING NO. REV. F
MFG. APPR.		D2650 SHEET 4 OF 6
APPROVED		TITLE SCALE
DE APPR.		206/407 SKIDTUBE ASSEMBLIES NTS
DATE 08.08.08		

COPYRIGHT © 1997 BY DART AEROSPACE USA, INC
THIS DOCUMENT IS PRIVATE AND CONFIDENTIAL AND IS SUPPLIED ON THE EXPRESS CONDITION THAT IT IS NOT TO BE USED FOR ANY PURPOSE OR COPIED OR COMMUNICATED TO ANY OTHER PERSON WITHOUT WRITTEN PERMISSION FROM DART AEROSPACE USA, INC.

Dart Aerospace Ltd

W/O:		WORK ORDER CHANGES					
DATE	STEP	PROCEDURE CHANGE	By	Date	Qty	Approval Chief Eng / Prod Mgr	Approval QC Inspector

Part No: _____ **PAR #:** _____ **Fault Category:** _____ **NCR:** Yes No **DQA:** _____ **Date:** _____

Resolution: _____ **Disposition:** _____ **QA: N/C Closed:** _____ **Date:** _____

NCR:		WORK ORDER NON-CONFORMANCE (NCR)						
DATE	STEP	Description of NC Section A	Corrective Action Section B			Verification Section C	Approval Chief Eng	Approval QC Inspector
			Initial Chief Eng	Action Description Chief Eng	Sign & Date			

NOTE: Date & initial all entries

H:\fFORMS\Quality Assurance\approved QA\NCRWO RevE

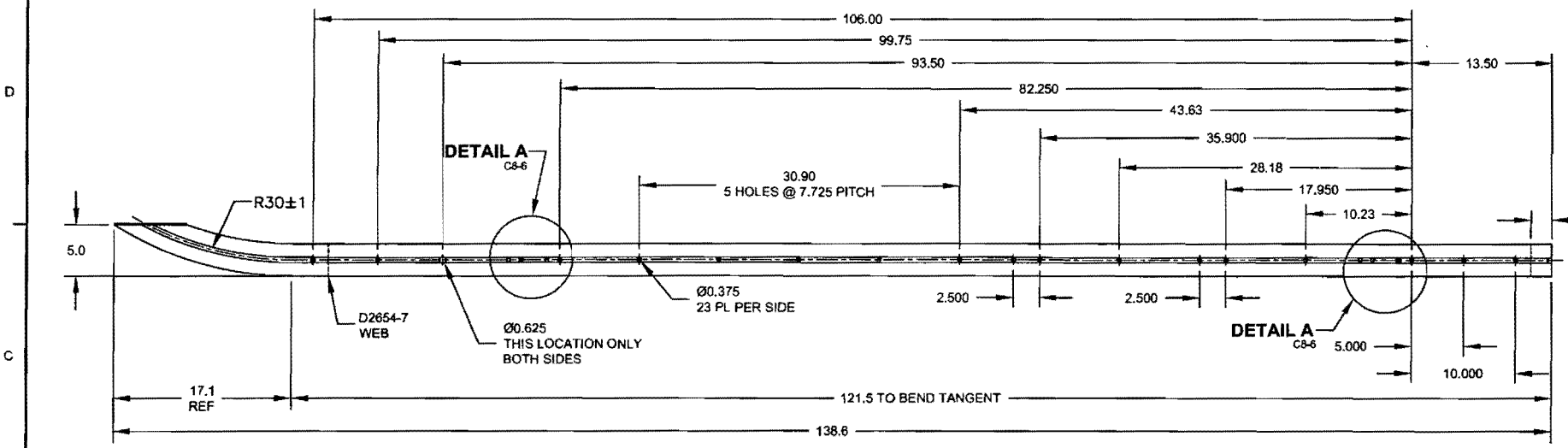

D2650-7 BENDING/DRILL DETAIL

w/o 67157

RELEASED
08-27-22

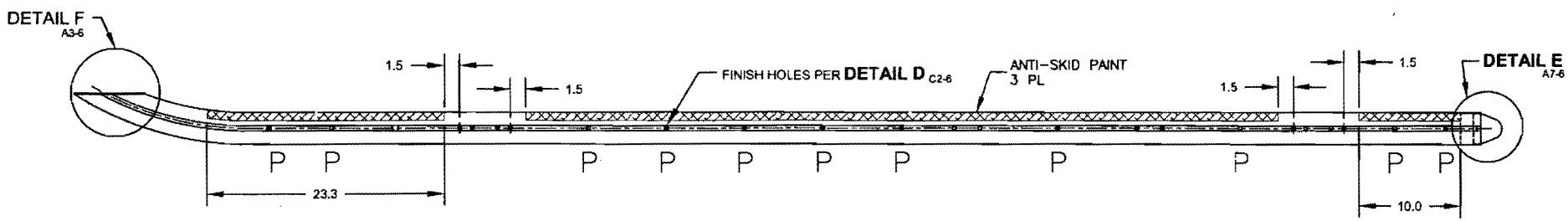

D2650-7 ASSEMBLY/FINISHING DETAIL

DESIGN	DS	**DART AEROSPACE USA, INC** PORT HADLOCK, WA
DRAWN	AJS	
CHECKED		DRAWING NO. REV. F
MFG. APPR.		D2650 SHEET 5 OF 6
APPROVED		TITLE SCALE
DE APPR.		206/407 SKIDTUBE ASSEMBLIES NTS
DATE	08.08.08	

COPYRIGHT © 1997 BY DART AEROSPACE USA, INC
THIS DOCUMENT IS PRIVATE AND CONFIDENTIAL AND IS SUPPLIED ON THE EXPRESS CONDITION THAT IT IS NOT TO BE USED FOR ANY PURPOSE OR COPIED OR COMMUNICATED TO ANY OTHER PERSON WITHOUT WRITTEN PERMISSION FROM DART AEROSPACE USA, INC.

Dart Aerospace Ltd

W/O:		WORK ORDER CHANGES					
DATE	STEP	PROCEDURE CHANGE	By	Date	Qty	Approval Chief Eng / Prod Mgr	Approval QC Inspector

Part No: _____ **PAR #:** _____ **Fault Category:** _____ **NCR:** Yes No **DQA:** _____ **Date:** _____

Resolution: _____ **Disposition:** _____ **QA: N/C Closed:** _____ **Date:** _____

NCR:		WORK ORDER NON-CONFORMANCE (NCR)						
DATE	STEP	Description of NC Section A	Corrective Action Section B			Verification Section C	Approval Chief Eng	Approval QC Inspector
			Initial Chief Eng	Action Description Chief Eng	Sign & Date			

NOTE: Date & initial all entries

H:\fFORMS\Quality Assurance\approved QA\NCRWO RevE

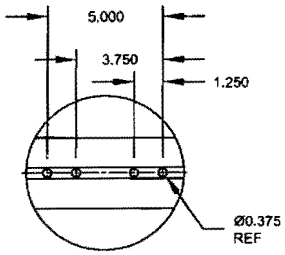

DETAIL A C2-2 D7-2 C2-3 D7-3 C2-4 D7-4 C2-5 D6-5
SCALE 2X

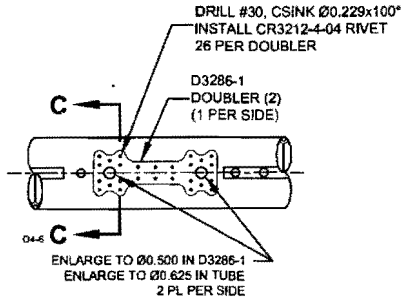

DETAIL B C3-2 C3-3
SCALE 2X

SECTION C-C C7-6
SCALE NONE

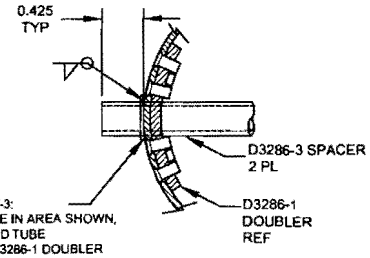

TO INSTALL D3286-1/-3:
1. GRIND OFF FLANGE IN AREA SHOWN, FLUSH WITH ROUND TUBE
2. LOCATE & DRILL D3286-1 DOUBLER USING DT3286-1T1
3. ENLARGE HOLES IN D3286-1 TO Ø0.500
4. ENLARGE HOLES IN TUBE TO Ø0.625 AND CHAMFER HOLE 0.030x45°
5. RIVET D3286-1 TO TUBE
6. INSERT D3286-3 SPACER
7. WELD IN PLACE. (F)

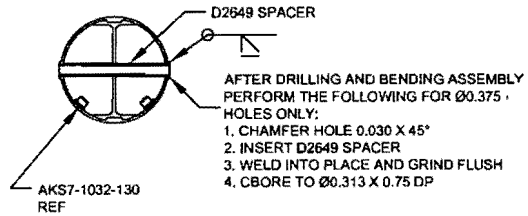

AFTER DRILLING AND BENDING ASSEMBLY PERFORM THE FOLLOWING FOR Ø0.375 HOLES ONLY:
1. CHAMFER HOLE 0.030 X 45°
2. INSERT D2649 SPACER
3. WELD INTO PLACE AND GRIND FLUSH
4. CBORE TO Ø0.313 X 0.75 DP

DETAIL D B4-2 B4-3 B4-4 B4-5
FOR Ø0.375 HOLES ONLY
SCALE 3X

w/o 47157

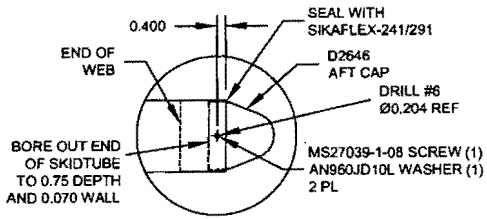

DETAIL E B2-2 B2-3 B1-4 B1-5
SCALE 2X

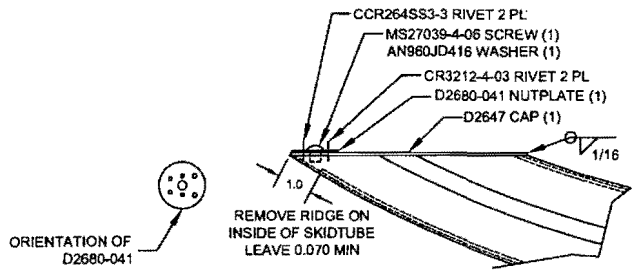

DETAIL F B8-2 B8-3 B8-4 B8-5
SCALE NONE

DETAIL F NOTES:
1. CUT TUBE LEVEL
2. REMOVE RIDGE ON FWD SIDE
3. LOCATE D2647 (TRIM AS NECESSARY)
4. WELD D2647 IN PLACE PER DART QSI 004
5. GRIND FLUSH
6. RIVET D2680-041 NUT PLATE IN PLACE

NOTE: MASK THREADS IN D2680-041 PRIOR TO FINISH

RELEASED 08.09.22

DESIGN	DS	**DART AEROSPACE USA, INC** PORT HADLOCK, WA
DRAWN	AJS	
CHECKED		DRAWING NO. REV. F
MFG. APPR.		D2650 SHEET 6 OF 6
APPROVED		TITLE SCALE
DE APPR.		206/407 SKIDTUBE ASSEMBLIES NTS
DATE	08.08.08	

COPYRIGHT © 1997 BY DART AEROSPACE USA, INC
THIS DOCUMENT IS PRIVATE AND CONFIDENTIAL AND IS SUPPLIED ON THE EXPRESS CONDITION THAT IT IS NOT TO BE USED FOR ANY PURPOSE OR COPIED OR COMMUNICATED TO ANY OTHER PERSON WITHOUT WRITTEN PERMISSION FROM DART AEROSPACE USA, INC.

Dart Aerospace Ltd

W/O:		WORK ORDER CHANGES					
DATE	STEP	PROCEDURE CHANGE	By	Date	Qty	Approval Chief Eng / Prod Mgr	Approval QC Inspector

Part No: _____ **PAR #:** _____ **Fault Category:** _____ **NCR:** Yes No **DQA:** _____ **Date:** _____

Resolution: _____ **Disposition:** _____ **QA: N/C Closed:** _____ **Date:** _____

NCR:		WORK ORDER NON-CONFORMANCE (NCR)						
DATE	STEP	Description of NC Section A	Corrective Action Section B			Verification Section C	Approval Chief Eng	Approval QC Inspector
			Initial Chief Eng	Action Description Chief Eng	Sign & Date			

NOTE: Date & initial all entries

H:\fFORMS\Quality Assurance\approved QA\NCRWO RevE

NO. 246

AWS D17.1.2001
QUALIFICATION TEST RECORD

Name: Barklay Elliott
Job number: 66462
Part number: D206-642-441
Description: 206 skid tube.
Welding Process: Tig[X] Mig[ ]
Base materiel: aluminum
Current: AC[✓] DC[ ]

TEST REQUIREMENTS AND RESULTS

Visual:	pass[✓]	fail[ ]
Penetration:	pass[✓]	fail[ ]

UNACCEPTABLE

Cracks:	pass[✓]	fail[ ]
Undercut:	pass[✓]	fail[ ]
Pin holes:	pass[✓]	fail[ ]
Overlap (cold lap)	pass[✓]	fail[ ]
Porosity (surface):	pass[✓]	fail[ ]
Coloration:	pass[✓]	fail[ ]

Qualifier Pat Lewis **Date of Test Coupon** 11-03-09

Welder Barklay Elliott **Date of Test Coupon** 11-03-09

The above named individual is qualified in accordance with AWS D17.1.2001 to weld